SN54194, SN54LS194A, SN54S194, SN74194, SN74LS194A, SN74S194
4-BIT BIDIRECTIONAL UNIVERSAL SHIFT REGISTERS

MARCH 1974—REVISED MARCH 1988

- Parallel Inputs and Outputs
- Four Operating Modes:
  - Synchronous Parallel Load
  - Right Shift
  - Left Shift
  - Do Nothing
- Positive Edge-Triggered Clocking
- Direct Overriding Clear

TYPE	TYPICAL MAXIMUM CLOCK FREQUENCY	TYPICAL POWER DISSIPATION
'194	36 MHz	195 mW
'LS194A	36 MHz	75 mW
'S194	105 MHz	425 mW

SN54194, SN54LS194A, SN54S194 . . . J OR W PACKAGE
SN74194 . . . N PACKAGE
SN74LS194A, SN74S194 . . . D OR N PACKAGE
(TOP VIEW)

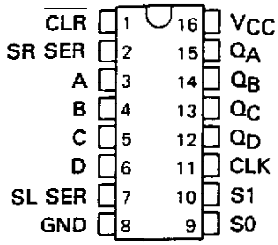

SN54LS194A, SN54S194 . . . FK PACKAGE
(TOP VIEW)

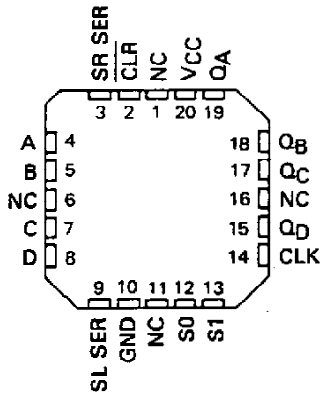

NC - No internal connection

description

These bidirectional shift registers are designed to incorporate virtually all of the features a system designer may want in a shift register. The circuit contains 46 equivalent gates and features parallel inputs, parallel outputs, right-shift and left-shift serial inputs, operating-mode-control inputs, and a direct overriding clear line. The register has four distinct modes of operation, namely:

Inhibit clock (do nothing)
Shift right (in the direction Q_A toward Q_D)
Shift left (in the direction Q_D toward Q_A)
Parallel (broadside) load

Synchronous parallel loading is accomplished by applying the four bits of data and taking both mode control inputs, S0 and S1, high. The data are loaded into the associated flip-flops and appear at the outputs after the positive transition of the clock input. During loading, serial data flow is inhibited.

Shift right is accomplished synchronously with the rising edge of the clock pulse when S0 is high and S1 is low. Serial data for this mode is entered at the shift-right data input. When S0 is low and S1 is high, data shifts left synchronously and new data is entered at the shift-left serial input.

Clocking of the shift register is inhibited when both mode control inputs are low. The mode controls of the SN54194/SN74194 should be changed only while the clock input is high.

logic symbol†

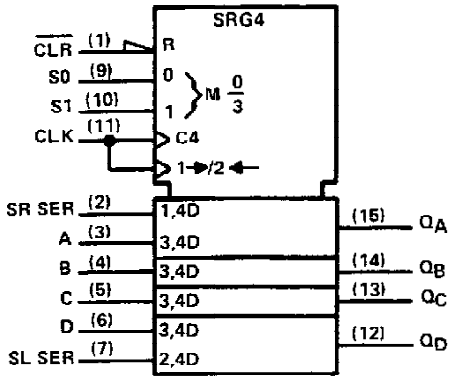

†This symbol is in accordance with ANSI/IEEE Std. 91-1984 and IEC Publication 617-12.
Pin numbers shown are for D, J, N, and W packages.

FUNCTION TABLE

INPUTS										OUTPUTS			
CLEAR	MODE		CLOCK	SERIAL		PARALLEL				Q_A	Q_B	Q_C	Q_D
	S1	S0		LEFT	RIGHT	A	B	C	D				
L	X	X	X	X	X	X	X	X	X	L	L	L	L
H	X	X	L	X	X	X	X	X	X	Q_{A0}	Q_{B0}	Q_{C0}	Q_{D0}
H	H	H	↑	X	X	a	b	c	d	a	b	c	d
H	L	H	↑	X	H	X	X	X	X	H	Q_{An}	Q_{Bn}	Q_{Cn}
H	L	H	↑	X	L	X	X	X	X	L	Q_{An}	Q_{Bn}	Q_{Cn}
H	H	L	↑	H	X	X	X	X	X	Q_{Bn}	Q_{Cn}	Q_{Dn}	H
H	H	L	↑	L	X	X	X	X	X	Q_{Bn}	Q_{Cn}	Q_{Dn}	L
H	L	L	X	X	X	X	X	X	X	Q_{A0}	Q_{B0}	Q_{C0}	Q_{D0}

H = high level (steady state)
L = low level (steady state)
X = irrelevant (any input, including transitions)
↑ = transition from low to high level
a, b, c, d = the level of steady-state input at inputs A, B, C, or D, respectively.
Q_{A0}, Q_{B0}, Q_{C0}, Q_{D0} = the level of Q_A, Q_B, Q_C, or Q_D, respectively, before the indicated steady-state input conditions were established.
Q_{An}, Q_{Bn}, Q_{Cn}, Q_{Dn} = the level of Q_A, Q_B, Q_C, respectively, before the most-recent ↑ transition of the clock.

schematics of inputs and outputs

'194

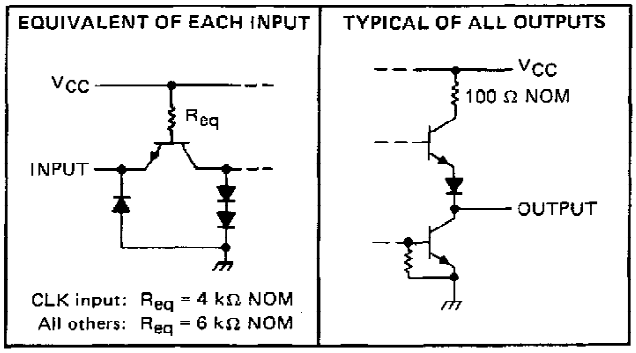

'LS194A

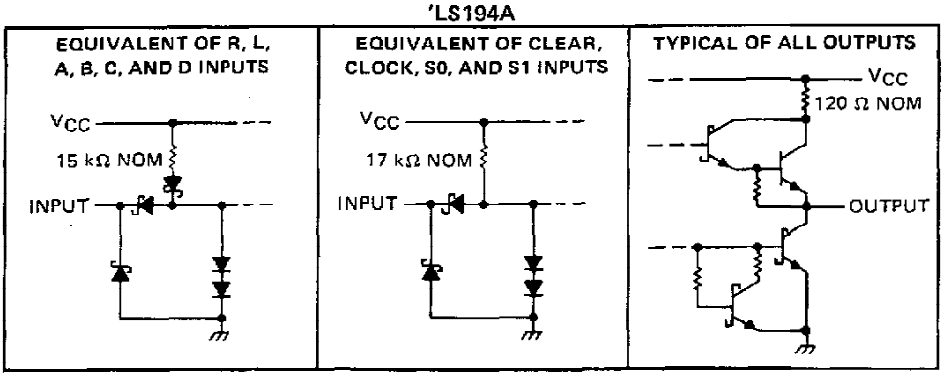

'S194

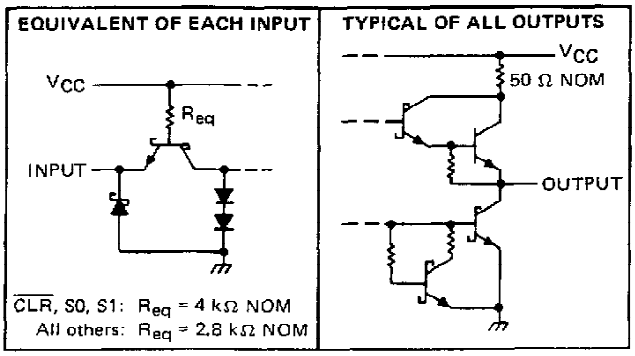

logic diagrams (positive logic)

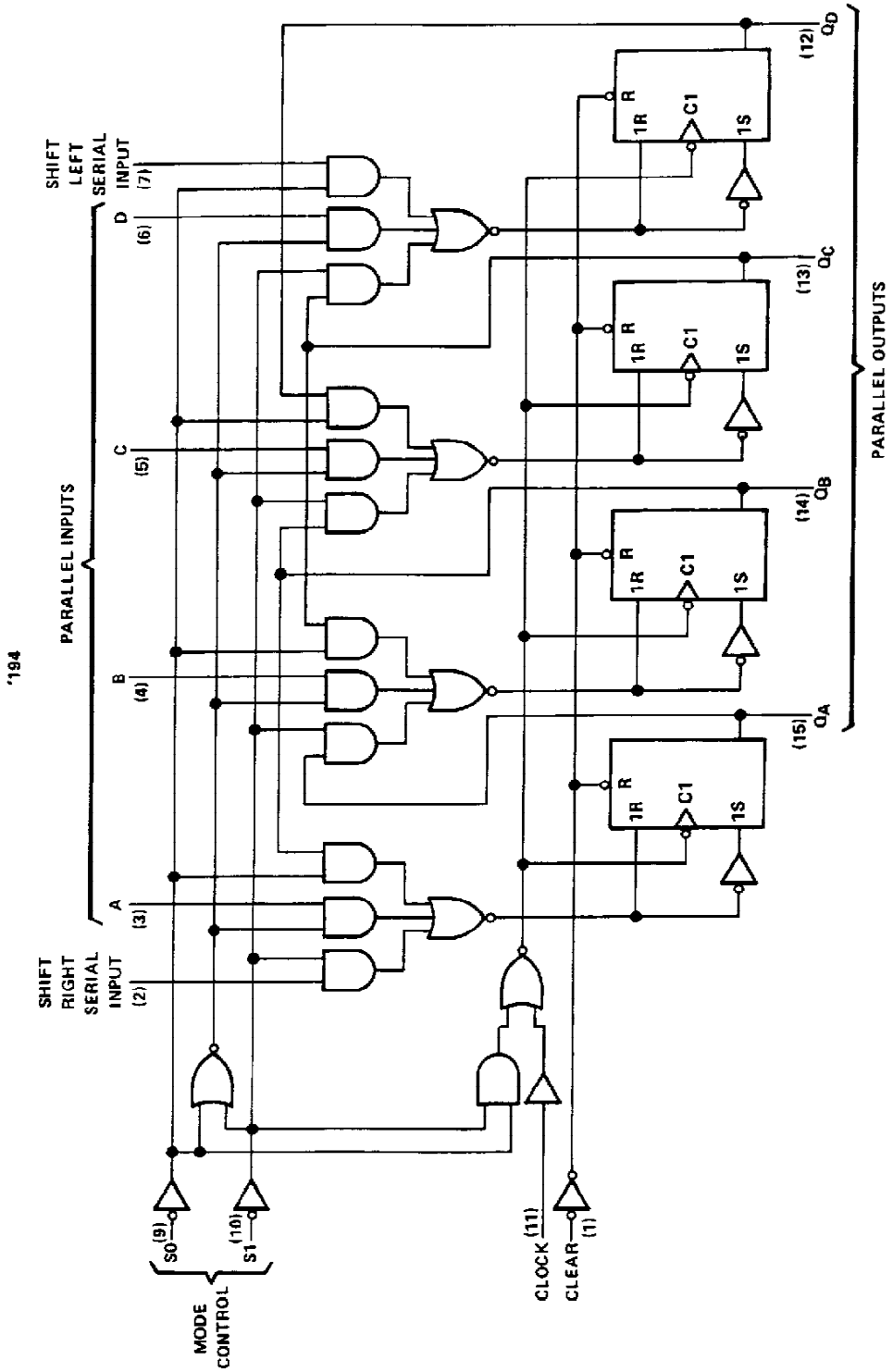

Pin numbers shown are for D, J, N, and W packages.

logic diagrams (continued)

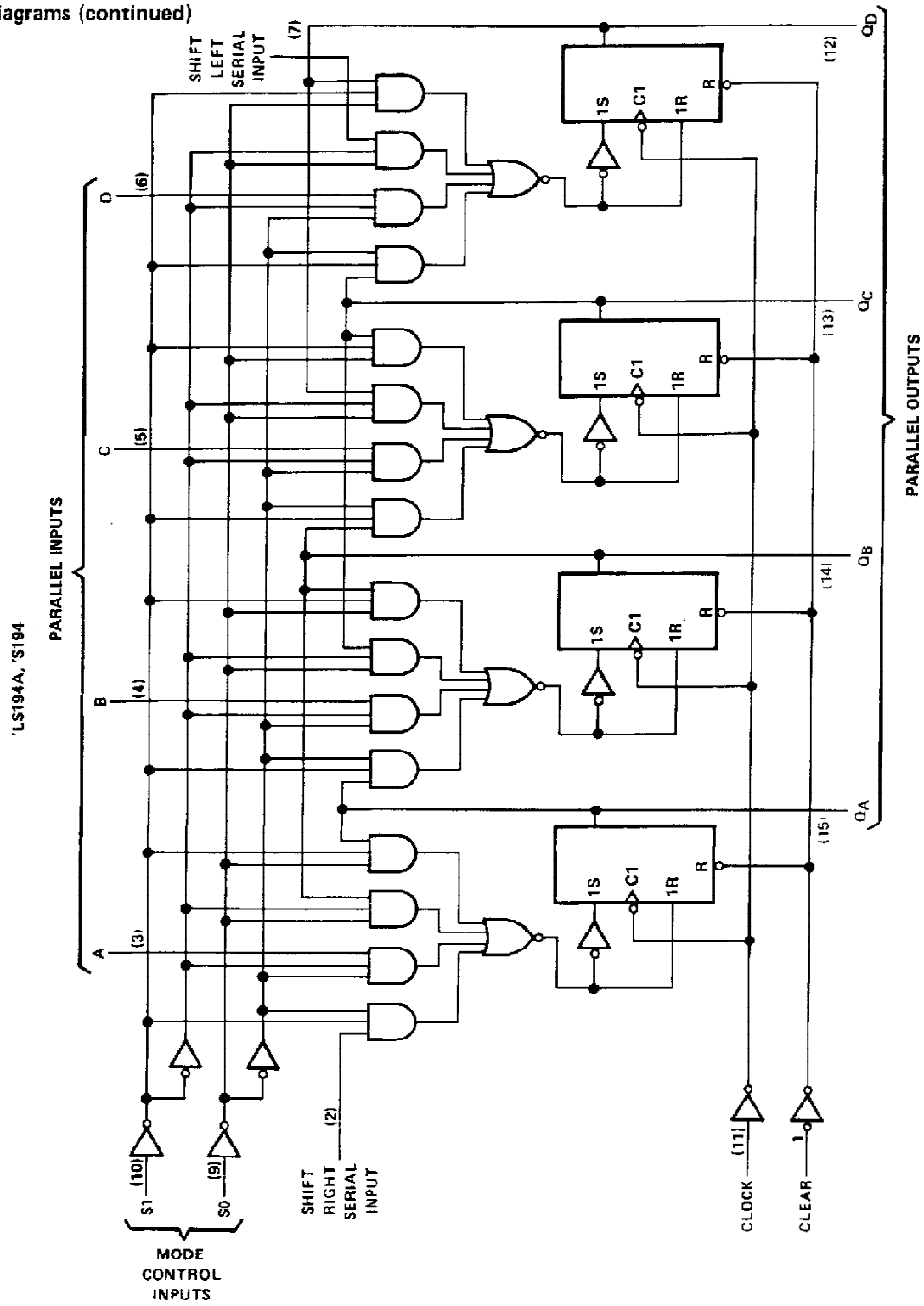

Pin numbers shown on logic notation are for D, J or N, and W packages.

typical clear, load, right-shift, left-shift, inhibit, and clear sequences

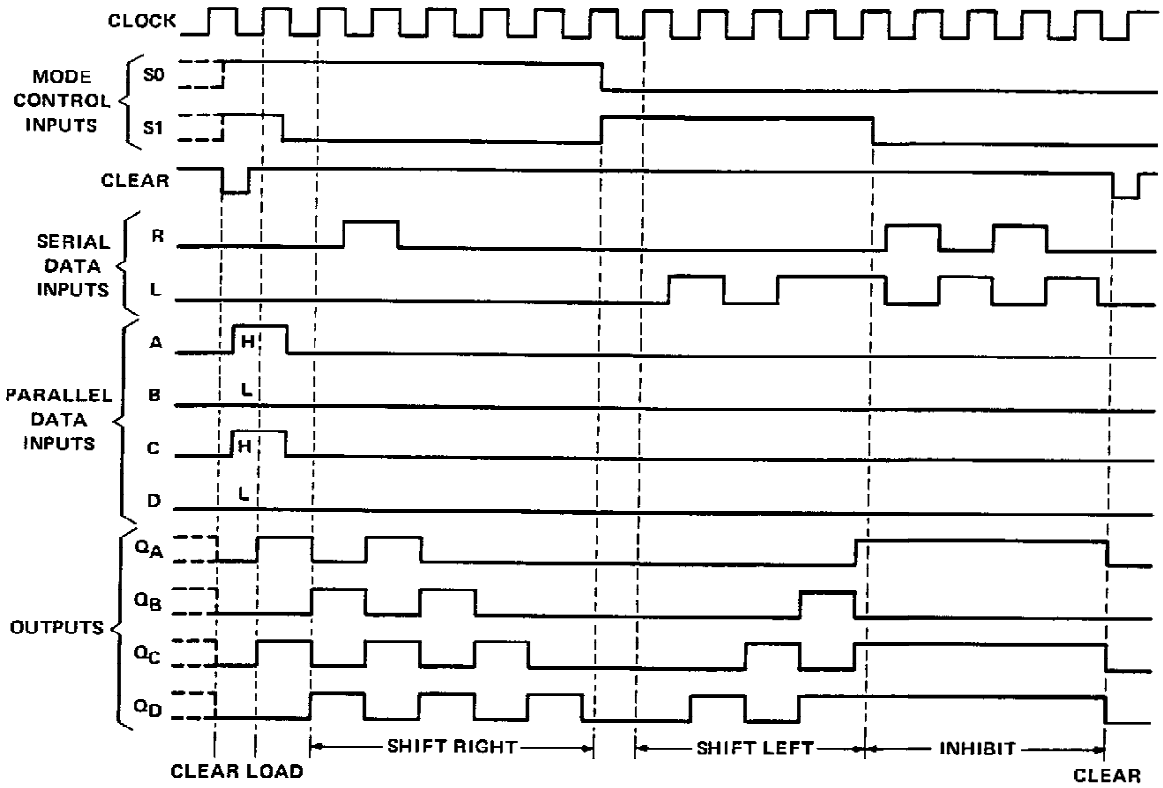

absolute maximum ratings over operating free-air temperature range (unless otherwise noted)

Supply voltage, V_{CC} (see Note 1) . . . . . 7 V
Input voltage . . . . . 5.5 V
Operating free-air temperature range: SN54194 . . . . . −55°C to 125°C
SN74194 . . . . . 0°C to 70°C
Storage temperature range . . . . . −65°C to 150°C

NOTE 1: Voltage values are with respect to network ground terminal.

recommended operating conditions

		SN54194			SN74194			UNIT
		MIN	NOM	MAX	MIN	NOM	MAX	
Supply voltage, V_{CC}		4.5	5	5.5	4.75	5	5.25	V
High-level output current, I_{OH}				−800			−800	μA
Low-level output current, I_{OL}				16			16	mA
Clock frequency, f_{clock}		0		25	0		25	MHz
Width of clock or clear pulse, t_w		20			20			ns
Setup time, t_{su}	Mode control	30			30			ns
	Serial and parallel data	20			20			ns
	Clear inactive-state	25			25			ns
Hold time at any input, t_h		0			0			ns
Operating free-air temperature, T_A		−55		125	0		70	°C

electrical characteristics over recommended operating free-air temperature range (unless otherwise noted)

PARAMETER		TEST CONDITIONS†	SN54194			SN74194			UNIT
			MIN	TYP‡	MAX	MIN	TYP‡	MAX	
V_{IH}	High-level input voltage		2			2			V
V_{IL}	Low-level input voltage				0.8			0.8	V
V_{IK}	Input clamp voltage	V_{CC} = MIN, I_I = −12 mA			−1.5			−1.5	V
V_{OH}	High-level output voltage	V_{CC} = MIN, V_{IH} = 2 V, V_{IL} = 0.8 V, I_{OH} = −800 μA	2.4	3.4		2.4	3.4		V
V_{OL}	Low-level output voltage	V_{CC} = MIN, V_{IH} = 2 V, V_{IL} = 0.8 V, I_{OL} = 16 mA		0.2	0.4		0.2	0.4	V
I_I	Input current at maximum input voltage	V_{CC} = MAX, V_I = 5.5 V			1			1	mA
I_{IH}	High-level input current	V_{CC} = MAX, V_I = 2.4 V			40			40	μA
I_{IL}	Low-level input current	V_{CC} = MAX, V_I = 0.4 V			−1.6			−1.6	mA
I_{OS}	Short-circuit output current§	V_{CC} = MAX	−20		−57	−18		−57	mA
I_{CC}	Supply current	V_{CC} = MAX, See Note 2		39	63		39	63	mA

†For conditions shown as MIN or MAX, use the appropriate value specified under recommended operating conditions.
‡All typical values are at V_{CC} = 5 V, T_A = 25°C.
§Not more than one output should be shorted at a time.
NOTE 2: With all outputs open, inputs A through D grounded, and 4.5 V applied to S0, S1, clear, and the serial inputs, I_{CC} is tested with a momentary GND, then 4.5 V applied to clock.

switching characteristics, V_{CC} = 5 V, T_A = 25°C

PARAMETER		TEST CONDITIONS	MIN	TYP	MAX	UNIT
f_{max}	Maximum clock frequency	C_L = 15 pF, R_L = 400 Ω, See Figure 1	25	36		MHz
t_{PHL}	Propagation delay time, high-to-low-level output from clear			19	30	ns
t_{PLH}	Propagation delay time, low-to-high-level output from clock			14	22	ns
t_{PHL}	Propagation delay time, high-to-low-level output from clock			17	26	ns

absolute maximum ratings over operating free-air temperature range (unless otherwise noted)

Supply voltage, V_{CC} (see Note 1) . . . . . 7 V
Input voltage . . . . . 7 V
Operating free-air temperature range: SN54LS194A . . . . . −55°C to 125°C
SN74LS194A . . . . . 0°C to 70°C
Storage temperature range . . . . . −65°C to 150°C

NOTE 1: Voltage values are with respect to network ground terminal.

recommended operating conditions

		SN54LS194A			SN74LS194A			UNIT
		MIN	NOM	MAX	MIN	NOM	MAX	
Supply voltage, V_{CC}		4.5	5	5.5	4.75	5	5.25	V
High-level output current, I_{OH}				−400			−400	μA
Low-level output current, I_{OL}				4			8	mA
Clock frequency, f_{clock}		0		25	0		25	MHz
Width of clock or clear pulse, t_w		20			20			ns
Setup time, t_{su}	Mode control	30			30			ns
	Serial and parallel data	20			20			ns
	Clear inactive-state	25			25			ns
Hold time at any input, t_h		0			0			ns
Operating free-air temperature, T_A		−55		125	0		70	°C

electrical characteristics over recommended operating free-air temperature range (unless otherwise noted)

PARAMETER		TEST CONDITIONS†			SN54LS194A			SN74LS194A			UNIT
					MIN	TYP‡	MAX	MIN	TYP‡	MAX	
V_{IH}	High-level input voltage				2			2			V
V_{IL}	Low-level input voltage						0.7			0.8	V
V_I	Input clamp voltage	V_{CC} = MIN,	I_I = −18 mA				−1.5			−1.5	V
V_{OH}	High-level output voltage	V_{CC} = MIN, $V_{IL} = V_{IL}$ max,	V_{IH} = 2 V, I_{OH} = −400 μA		2.5	3.5		2.7	3.5		V
V_{OL}	Low-level output voltage	V_{CC} = MIN, $V_{IL} = V_{IL}$ max	V_{IH} = 2 V,	I_{OL} = 4 mA		0.25	0.4		0.25	0.4	V
				I_{OL} = 8 mA					0.35	0.5	
I_I	Input current at maximum input voltage	V_{CC} = MAX,	V_I = 7 V				0.1			0.1	mA
I_{IH}	High-level input current	V_{CC} = MAX,	V_I = 2.7 V				20			20	μA
I_{IL}	Low-level input current	V_{CC} = MAX,	V_I = 0.4 V				−0.4			−0.4	mA
I_{OS}	Short-circuit output current§	V_{CC} = MAX			−20		−100	−20		−100	mA
I_{CC}	Supply current	V_{CC} = MAX,	See Note 2			15	23		15	23	mA

†For conditions shown as MIN or MAX, use the appropriate value specified under recommended operating conditions.
‡All typical values are at V_{CC} = 5 V, T_A = 25°C.
§Not more than one output should be shorted at a time, and duration of the short-circuit should not exceed one second.
NOTE 2: With all outputs open, inputs A through D grounded, and 4.5 V applied to S0, S1, clear, and the serial inputs, I_{CC} is tested with a momentary GND, then 4.5 V, applied to clock.

switching characteristics, V_{CC} = 5 V, T_A = 25°C

PARAMETER		TEST CONDITIONS	MIN	TYP	MAX	UNIT
f_{max}	Maximum clock frequency	C_L = 15 pF, R_L = 2 kΩ, See Figure 1	25	36		MHz
t_{PHL}	Propagation delay time, high-to-low-level output from clear			19	30	ns
t_{PLH}	Propagation delay time, low-to-high level output from clock			14	22	ns
t_{PHL}	Propagation delay time, high-to-low level output from clock			17	26	ns

absolute maximum ratings over operating free-air temperature range (unless otherwise noted)

Supply voltage, V_{CC} (see Note 1) . . . . . 7 V
Input voltage . . . . . 5.5 V
Operating free-air temperature range: SN54S194 . . . . . −55°C to 125°C
SN74S194 . . . . . 0°C to 70°C
Storage temperature range . . . . . −65°C to 150°C

NOTE 1: Voltage values are with respect to network ground terminal.

recommended operating conditions

		SN54S194			SN74S194			UNIT
		MIN	NOM	MAX	MIN	NOM	MAX	
Supply voltage, V_{CC}		4.5	5	5.5	4.75	5	5.25	V
High-level output current, I_{OH}				−1			−1	mA
Low-level output current, I_{OL}				20			20	mA
Clock frequency, f_{clock}		0		70	0		70	MHz
Width of clock pulse, $t_{w(clock)}$		7			7			ns
Width of clear pulse, $t_{w(clear)}$		12			12			ns
Setup time, t_{su}	Mode control	11			11			ns
	Serial and parallel data	5			5			ns
	Clear inactive-state	9			9			ns
Hold time at any input, t_h		3			3			ns
Operating free-air temperature, T_A		−55		125	0		70	°C

electrical characteristics over recommended operating free-air temperature range (unless otherwise noted)

PARAMETER		TEST CONDITIONS†		SN54S194			SN74S194			UNIT
				MIN	TYP‡	MAX	MIN	TYP‡	MAX	
V_{IH}	High-level input voltage			2			2			V
V_{IL}	Low-level input voltage					0.8			0.8	V
V_{IK}	Input clamp voltage	V_{CC} = MIN,	I_I = −18 mA			−1.2			−1.2	V
V_{OH}	High-level output voltage	V_{CC} = MIN, V_{IH} = 2 V, V_{IL} = 0.8 V,	I_{OH} = −1 mA	2.5	3.4		2.7	3.4		V
V_{OL}	Low-level output voltage	V_{CC} = MIN, V_{IH} = 2 V, V_{IL} = 0.8 V,	I_{OL} = 20 mA			0.5			0.5	V
I_I	Input current at maximum input voltage	V_{CC} = MAX,	V_I = 5.5 V			1			1	mA
I_{IH}	High-level input current	V_{CC} = MAX,	V_I = 2.7 V			50			50	μA
I_{IL}	Low-level input current	V_{CC} = MAX,	V_I = 0.5 V			−2			−2	mA
I_{OS}	Short-circuit output current§	V_{CC} = MAX		−40		−100	−40		−100	mA
I_{CC}	Supply current	V_{CC} = MAX,	See Note 2		85	135		85	135	mA
		V_{CC} = MAX, T_A = 125°C, See Note 2	W package			110				

†For conditions shown as MIN or MAX, use the appropriate value specified under recommended operating conditions.
‡All typical values are at V_{CC} = 5 V, T_A = 25°C.
§Not more than one output should be shorted at a time, and duration of the short-circuit should not exceed one second.
NOTE 2: With all outputs open, inputs A through D grounded, and 4.5 V applies to S0, S1, clear, and the serial inputs, I_{CC} is tested with a momemtary GND, then 4.5 V, applied to clock.

switching characteristics, V_{CC} = 5 V, T_A = 25°C

PARAMETER		TEST CONDITIONS	MIN	TYP	MAX	UNIT
f_{max}	Maximum clock frequency	C_L = 15 pF, R_L = 280 Ω, See Figure 1	70	106		MHz
t_{PHL}	Propagation delay time, high-to-low-level output from clear			12.5	18.5	ns
t_{PLH}	Propagation delay time, low-to-high-level output from clock		4	8	12	ns
t_{PHL}	Propagation delay time, high-to-low-level output from clock		4	11	16.5	ns

PARAMETER MEASUREMENT INFORMATION

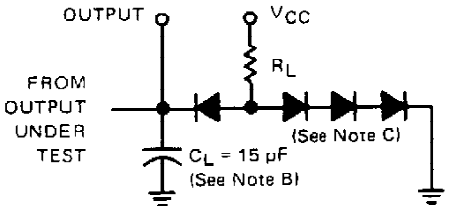

LOAD FOR OUTPUT UNDER TEST

TEST TABLE FOR SYNCHRONOUS INPUTS

DATA INPUT FOR TEST	S1	S0	OUTPUT TESTED (SEE NOTE E)
A	4.5 V	4.5 V	Q_A at t_{n+1}
B	4.5 V	4.5 V	Q_B at t_{n+1}
C	4.5 V	4.5 V	Q_C at t_{n+1}
D	4.5 V	4.5 V	Q_D at t_{n+1}
L Serial Input	4.5 V	0 V	Q_A at t_{n+4}
R Serial Input	0 V	4.5 V	Q_D at t_{n+4}

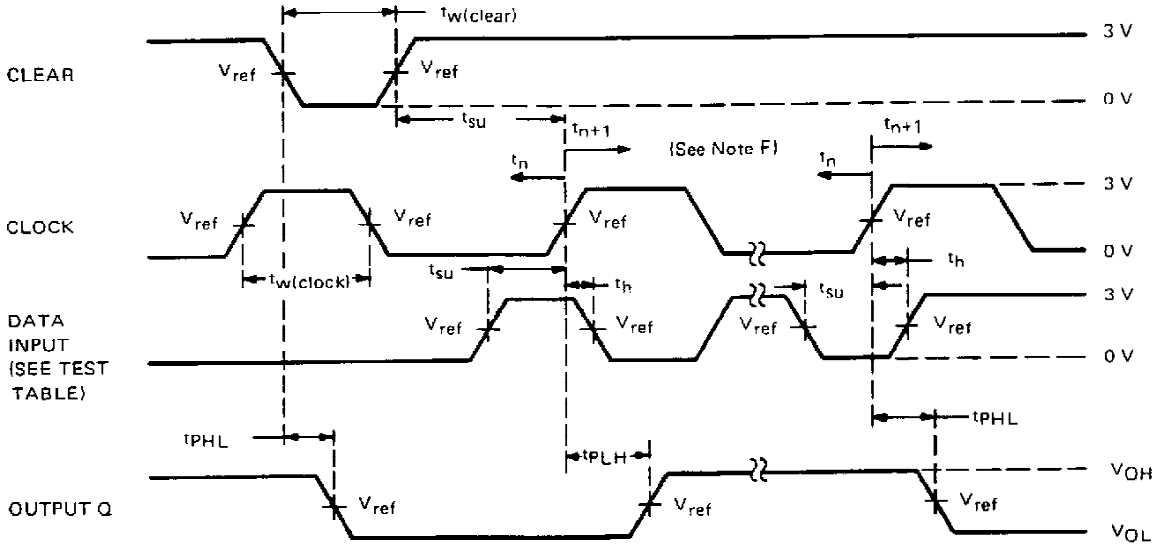

VOLTAGE WAVEFORMS

NOTES: A. The clock pulse generator has the following characteristics: $Z_{out} \approx 50\ \Omega$ and PRR $\leq$ 1 MHz, For '194, $t_r \leq 7$ ns and $t_f \leq 7$ ns. For 'LS194A, $t_r \leq 15$ ns and $t_f \leq 6$ ns. For 'S194, $t_r \leq 2.5$ ns and $t_f \leq 2.5$ ns. When testing f_{max}, vary PRR.

B. C_L includes probe and jig capacitance.

C. All diodes are 1N3064 or 1N916.

D. A clear pulse is applied prior to each test.

E. For '194 and 'S194, V_{ref} = 1.5 V; for 'LS194A, V_{ref} = 1.3 V.

F. Propagation delay times (t_{PLH} and t_{PHL}) are measured at t_{n+1}. Proper shifting of data is verified at t_{n+4} with a functional test.

G. t_n = bit time before clocking transition.
t_{n+1} = bit time after one clocking transition.
t_{n+4} = bit time after four clocking transitions.

FIGURE 1—SWITCHING TIMES